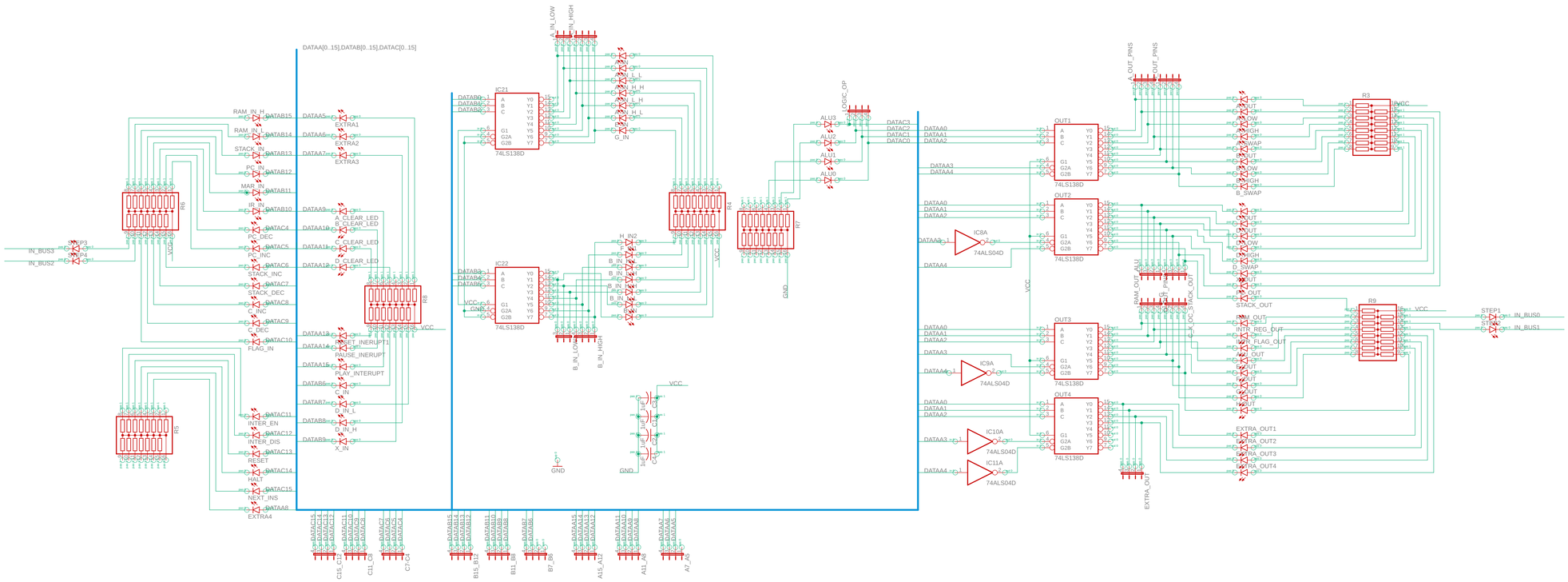
DATAA[0..15],DATAB[0..15],DATAC[0..15]
RAM_IN_H
RAM_IN_L
STACK_IN
PC_IN
MAR_IN
IR_IN
PC_DEC
PC_INC
STACK_INC
STACK_DEC
C_INC
C_DEC
FLAG_IN
INTER_EN
INTER_DIS
RESET
HALT
NEXT_INS
EXTRA1
EXTRA2
EXTRA3
EXTRA4
A_CLEAR_LED
B_CLEAR_LED
C_CLEAR_LED
D_CLEAR_LED
RESET_INERUPT1
PAUSE_INERUPT
PLAY_INTERUPT
G_IN_L
D_IN_H
X_IN
IN_BUS3
IN_BUS2
STEP3
STEP4
R5
R6
R8
R7
R4
IC21
IC22
74LS138D
H_IN_LOW
H_IN_HIGH
B_IN_LOW
B_IN_HIGH
H_IN2
B_IN
G_IN
VCC
GND
ALU3
ALU2
ALU1
ALU0
DGIC_OP
DATAC3
DATAC2
DATAC1
DATAC0
OUT1
OUT2
OUT3
OUT4
IC8A
IC9A
IC10A
IC11A
74AL504D
A_OUT_PINS
OUT_PINS
R3
R9
STACK_OUT
INTR_REG_OUT
IN_FLAG_OUT
EXTRA_OUT1
EXTRA_OUT2
EXTRA_OUT3
EXTRA_OUT4
STEP1
STEP2
IN_BUS0
IN_BUS1
C15_C8
C11_C4
C7-C4
B15_B12
B11_B8
B7_B6
A15_A12
A11_A8
A7_A5

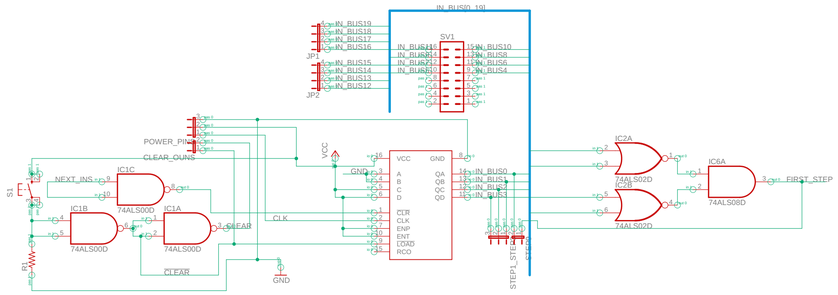
IN_BUS0..19
JP2
JP2
SV1
IN_BUS19
IN_BUS18
IN_BUS17
IN_BUS16
IN_BUS15
IN_BUS14
IN_BUS13
IN_BUS12
IN_BUS10
IN_BUS8
IN_BUS6
IN_BUS4
POWER_PINS
CLEAR_OUNS
NEXT_INS
IC1C
74ALS00D
IC1B
74ALS00D
IC1A
74ALS00D
CLEAR
CLEAR
S1
R1
VCC
GND
GND
CLK
IC2A
74ALS02D
IC2B
74ALS02D
IC6A
74ALS08D
FIRST_STEP
STEP1_STEP2
STEP2

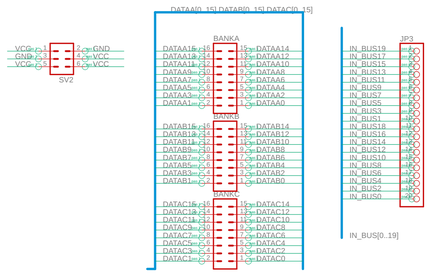
DATA[0..15],DATAB[0..15],DATAC[0..15]
VCC
GND
VCC
1
3
5
2
4
6
GND
VCC
VCC
SV2
BANKA
DATAA15
DATAA13
DATAA11
DATAA9
DATAA7
DATAA5
DATAA3
DATAA1
30
28
32
30
8
6
4
2
15
13
11
9
7
5
3
1
DATAA14
DATAA12
DATAA10
DATAA8
DATAA6
DATAA4
DATAA2
DATAA0
BANKB
DATAB15
DATAB13
DATAB11
DATAB9
DATAB7
DATAB5
DATAB3
DATAB1
30
28
32
30
8
6
4
2
15
13
11
9
7
5
3
1
DATAB14
DATAB12
DATAB10
DATAB8
DATAB6
DATAB4
DATAB2
DATAB0
BANKC
DATAC15
DATAC13
DATAC11
DATAC9
DATAC7
DATAC5
DATAC3
DATAC1
30
28
32
30
8
6
4
2
15
13
11
9
7
5
3
1
DATAC14
DATAC12
DATAC10
DATAC8
DATAC6
DATAC4
DATAC2
DATAC0
IN_BUS[0..19]
JP3
IN_BUS19
IN_BUS17
IN_BUS15
IN_BUS13
IN_BUS11
IN_BUS9
IN_BUS7
IN_BUS5
IN_BUS3
IN_BUS1
IN_BUS18
IN_BUS16
IN_BUS14
IN_BUS12
IN_BUS10
IN_BUS8
IN_BUS6
IN_BUS4
IN_BUS2
IN_BUS0
NO
IN_BUS[0..19]

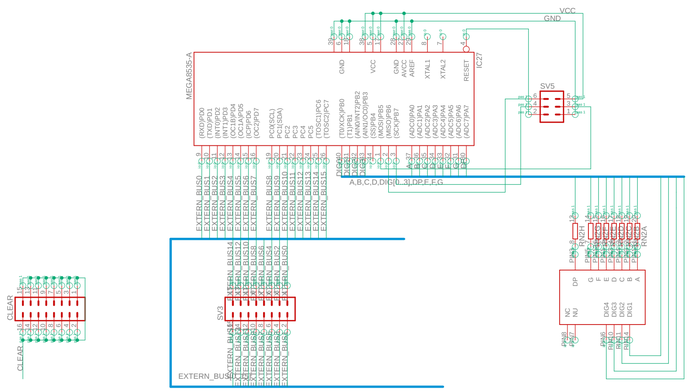
MEGA85-35-A
VCC
GND
SV5
SV7
CLEAR
EXTERN_BUS
A,B,C,D,DP,E,F,G
DIG1
DIG2
DIG3
DIG4
DIG5
DIG6
DIG7
DIG8
RDST
NC
NC
DP
G
F
E
D
C
A
PWR
PWR